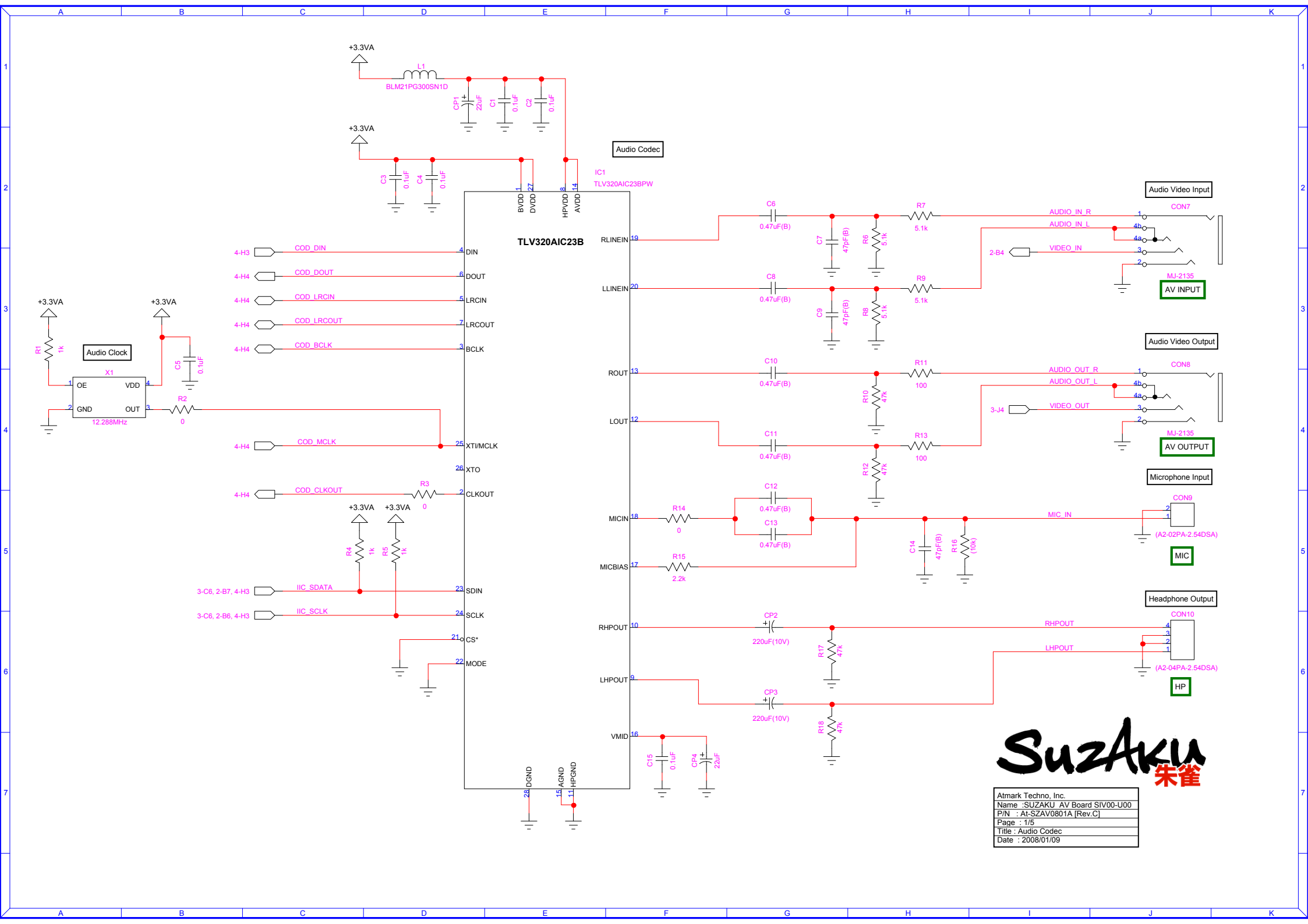
Audio Codec
IC1
TLV320AIC23BPW
TLV320AIC23B
+3.3VA
L1
BLM21PG300SN1D
CP1 22uF
C1 0.1uF
C2 0.1uF
C3 0.1uF
C4 0.1uF
BVDD
DVDD
HPVDD
AVDD
DGND
AGND
HPGND
DIN
DOUT
LRCIN
LRCOUT
BCLK
XTI/MCLK
XTO
CLKOUT
SDIN
SCLK
CS*
MODE
RLINEIN
LLINEIN
ROUT
LOUT
MICIN
MICBIAS
RHPOUT
LHPOUT
VMID
4-H3
COD_DIN
4-H4
COD_DOUT
COD_LRCIN
COD_LRCOUT
COD_BCLK
COD_MCLK
COD_CLKOUT
3-C6, 2-B7, 4-H3
IIC_SDATA
3-C6, 2-B6, 4-H3
IIC_SCLK
Audio Clock
X1
OE
VDD
GND
OUT
12.288MHz
R1 1k
R2 0
C5 0.1uF
R3 0
R4 1k
R5 1k
Audio Video Input
CON7
AUDIO_IN_R
AUDIO_IN_L
2-B4
VIDEO_IN
MJ-2135
AV INPUT
C6 0.47uF(B)
C7 47pF(B)
R6 5.1k
R7 5.1k
C8 0.47uF(B)
C9 47pF(B)
R8 5.1k
R9 5.1k
Audio Video Output
CON8
AUDIO_OUT_R
AUDIO_OUT_L
3-J4
VIDEO_OUT
MJ-2135
AV OUTPUT
C10 0.47uF(B)
R10 47k
R11 100
C11 0.47uF(B)
R12 47k
R13 100
Microphone Input
CON9
MIC_IN
(A2-02PA-2.54DSA)
MIC
R14 0
C12 0.47uF(B)
C13 0.47uF(B)
C14 47pF(B)
R16 (10k)
R15 2.2k
Headphone Output
CON10
RHPOUT
LHPOUT
(A2-04PA-2.54DSA)
HP
CP2 220uF(10V)
R17 47k
CP3 220uF(10V)
R18 47k
C15 0.1uF
CP4 22uF
SuzAku
朱雀
Atmark Techno, Inc.
Name :SUZAKU AV Board SIV00-U00
P/N : At-SZAV0801A [Rev.C]
Page : 1/5
Title : Audio Codec
Date : 2008/01/09

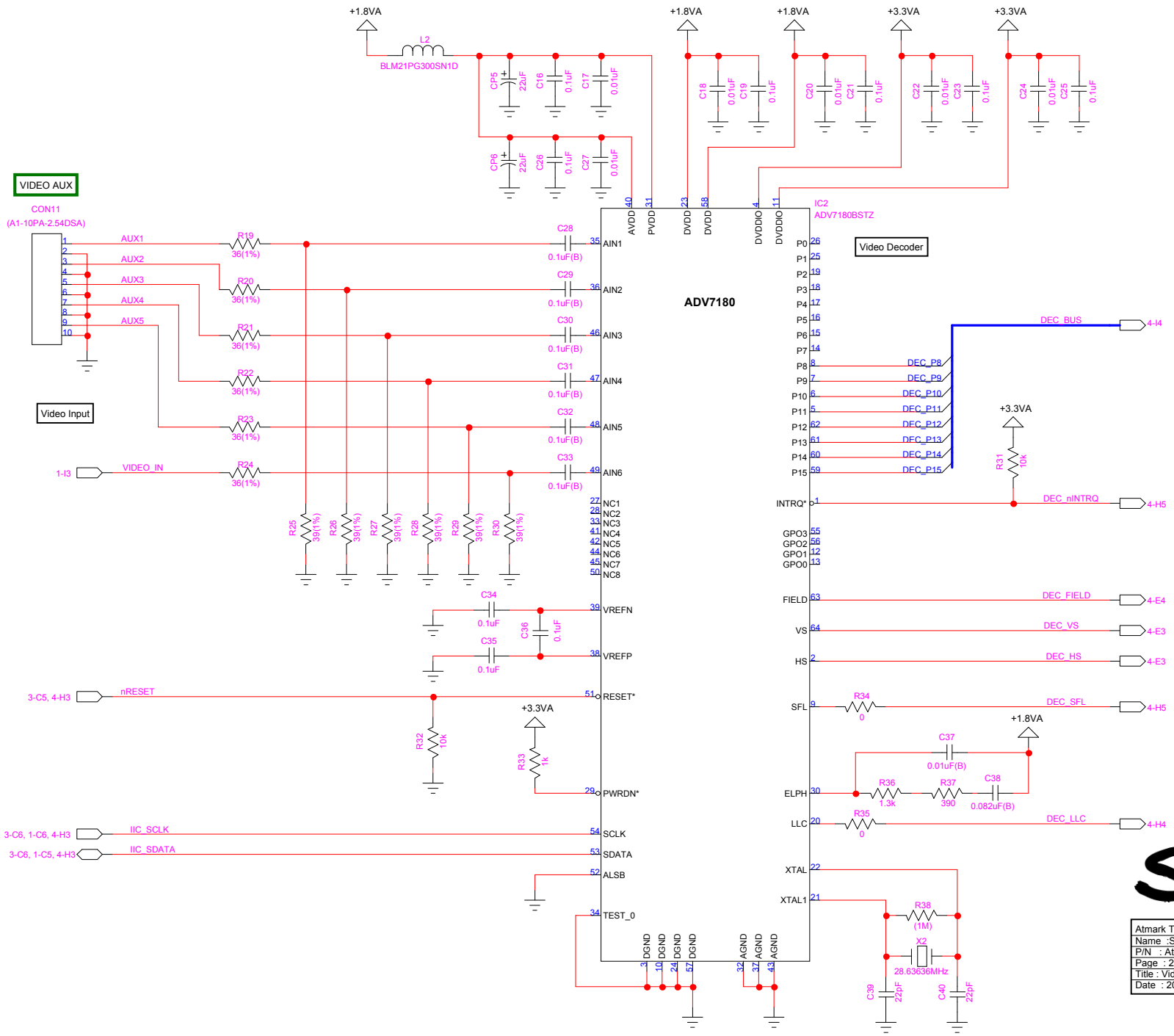

Atmark Techno, Inc.	
Name	:SUZAKU AV Board SIV00-U00
P/N	: At-SZAV0801A [Rev.C]
Page	: 2/5
Title	: Video Decoder
Date	: 2008/01/09

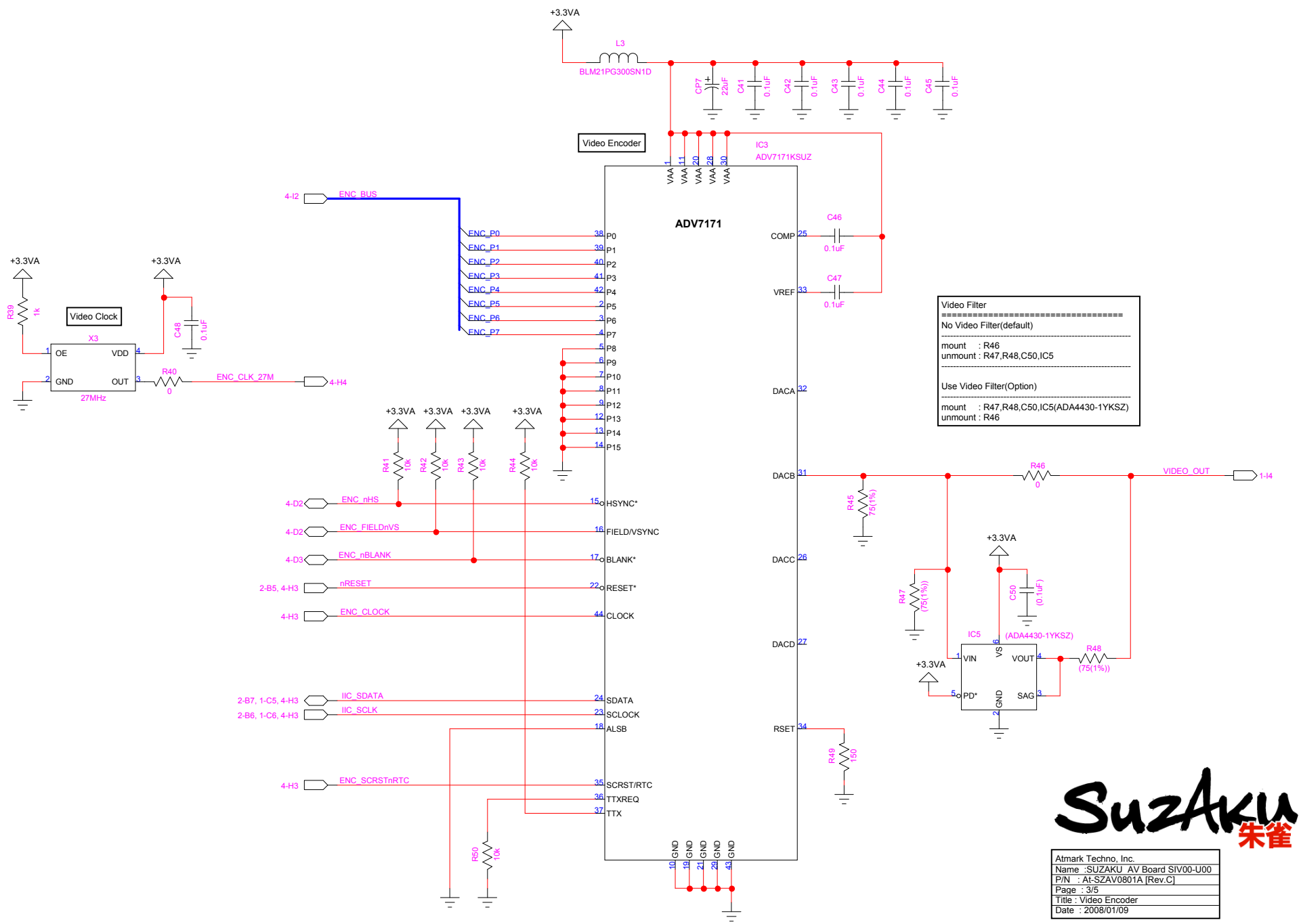
+3.3VA
L3
BLM21PG300SN1D
CP7 22uF
C41 0.1uF
C42 0.1uF
C43 0.1uF
C44 0.1uF
C45 0.1uF
Video Encoder
IC3
ADV7171KSUZ
ADV7171
VAA 1 11 20 28 30
4-I2
ENC_BUS
ENC_P0 38 P0
ENC_P1 39 P1
ENC_P2 40 P2
ENC_P3 41 P3
ENC_P4 42 P4
ENC_P5 2 P5
ENC_P6 3 P6
ENC_P7 4 P7
5 P8
6 P9
7 P10
8 P11
9 P12
12 P13
13 P14
14 P15
COMP 25
C46 0.1uF
VREF 33
C47 0.1uF
DACA 32
DACB 31
DACC 26
DACD 27
RSET 34
R49 150
+3.3VA
R39 1k
Video Clock
X3
OE 1
VDD 4
GND 2
OUT 3
27MHz
C48 0.1uF
R40 0
ENC_CLK_27M
4-H4
+3.3VA +3.3VA +3.3VA +3.3VA
R41 10k
R42 10k
R43 10k
R44 10k
4-D2 ENC_nHS 15 HSYNC*
4-D2 ENC_FIELDnVS 16 FIELD/VSYNC
4-D3 ENC_nBLANK 17 BLANK*
2-B5, 4-H3 nRESET 22 RESET*
4-H3 ENC_CLOCK 44 CLOCK
2-B7, 1-C5, 4-H3 IIC_SDATA 24 SDATA
2-B6, 1-C6, 4-H3 IIC_SCLK 23 SCLOCK
18 ALSB
4-H3 ENC_SCRSTnRTC 35 SCRST/RTC
36 TTXREQ
37 TTX
R50 10k
10 19 21 29 43 GND
Video Filter
==========
No Video Filter(default)
mount : R46
unmount : R47,R48,C50,IC5
Use Video Filter(Option)
mount : R47,R48,C50,IC5(ADA4430-1YKSZ)
unmount : R46
R45 75(1%)
R46 0
VIDEO_OUT
1-I4
+3.3VA
R47 (75(1%))
C50 (0.1uF)
IC5 (ADA4430-1YKSZ)
VIN 1
VS 6
VOUT 4
PD* 5
GND 2
SAG 3
R48 (75(1%))
+3.3VA
SuzAku 朱雀
Atmark Techno, Inc.
Name :SUZAKU AV Board SIV00-U00
P/N : At-SZAV0801A [Rev.C]
Page : 3/5
Title : Video Encoder
Date : 2008/01/09

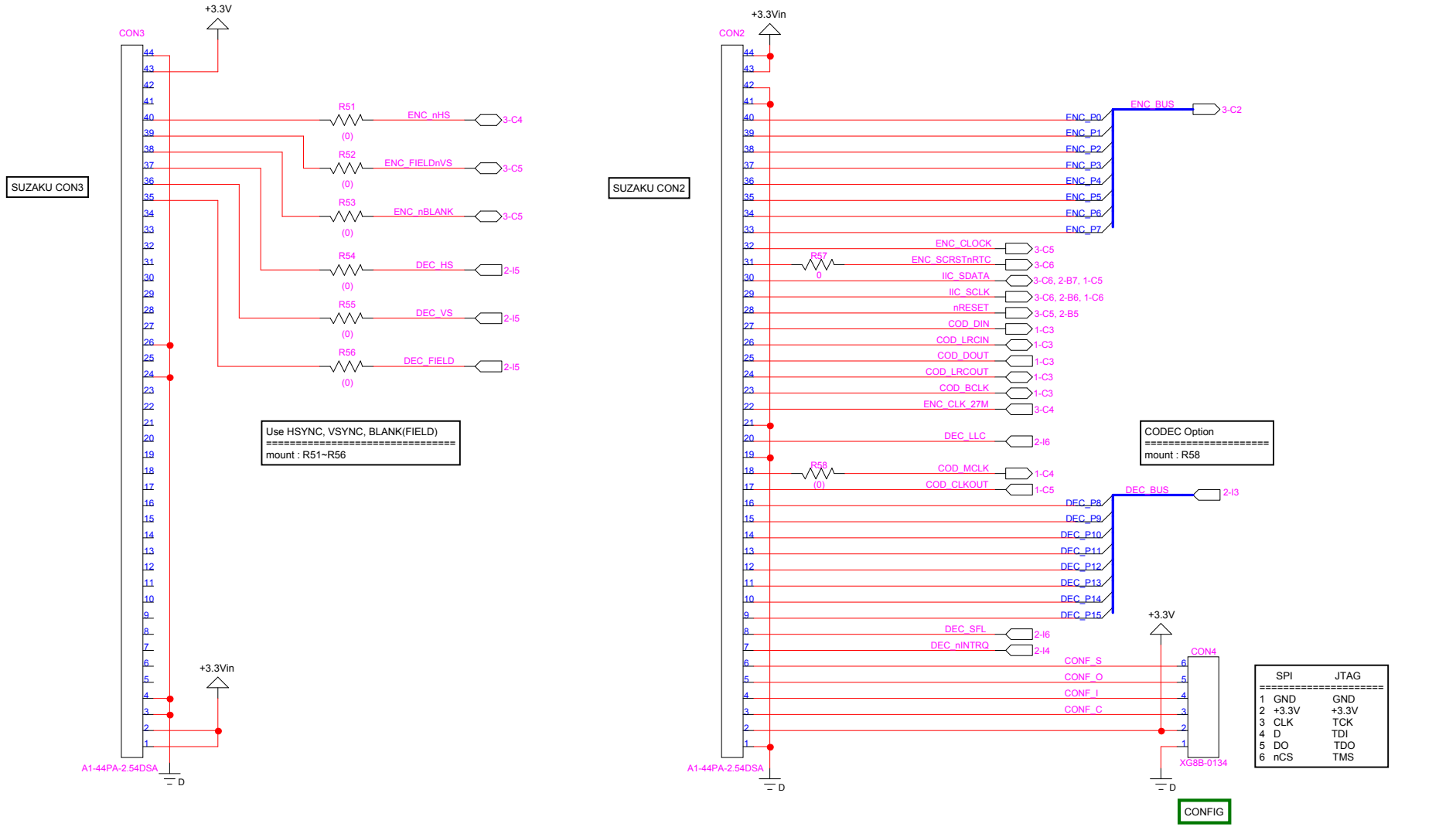

Atmark Techno, Inc.	
Name :SUZAKU AV Board SIV00-U00	
P/N : At-SZAV0801A [Rev.C]	
Page : 4/5	
Title : SUZAKU Connector	
Date : 2008/01/09	

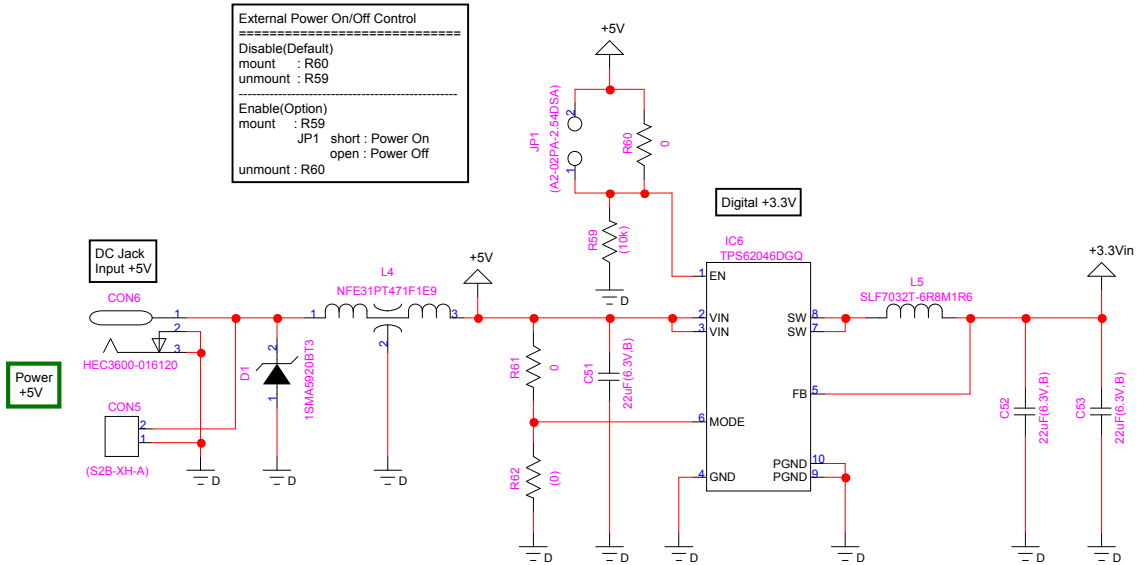

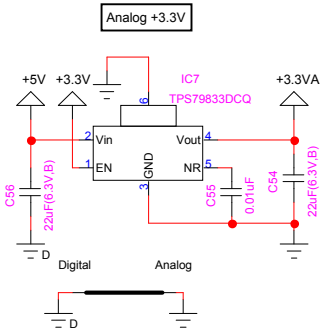

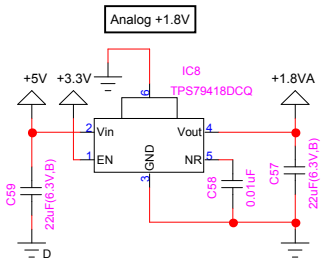

SuzAku 朱雀

Atmark Techno, Inc.	
Name :SUZAKU AV Board SIV00-U00	
P/N : At-SZAV0801A [Rev.C]	
Page : 5/5	
Title : Power	
Date : 2008/01/09	